Melrsoe

AS SHOWN
30 Sofa in LaRoyale Russet (100% Top grain leather)

SPRING SYSTEM
Tempered steel coil spring drop in unit.

BACKS
Feather/down/polyester blend in feather proof cotton ticking that is channeled to prevent bunching.

SEATS
Individually pocketed coil springs encased in high resiliency foam, wrapped in feather/down/polyester blend envelopes that are channeled to prevent bunching.

FRAME
Combination of hardwood/furniture grade laminate - corner blocked, glued & stapled.

Melrsoe

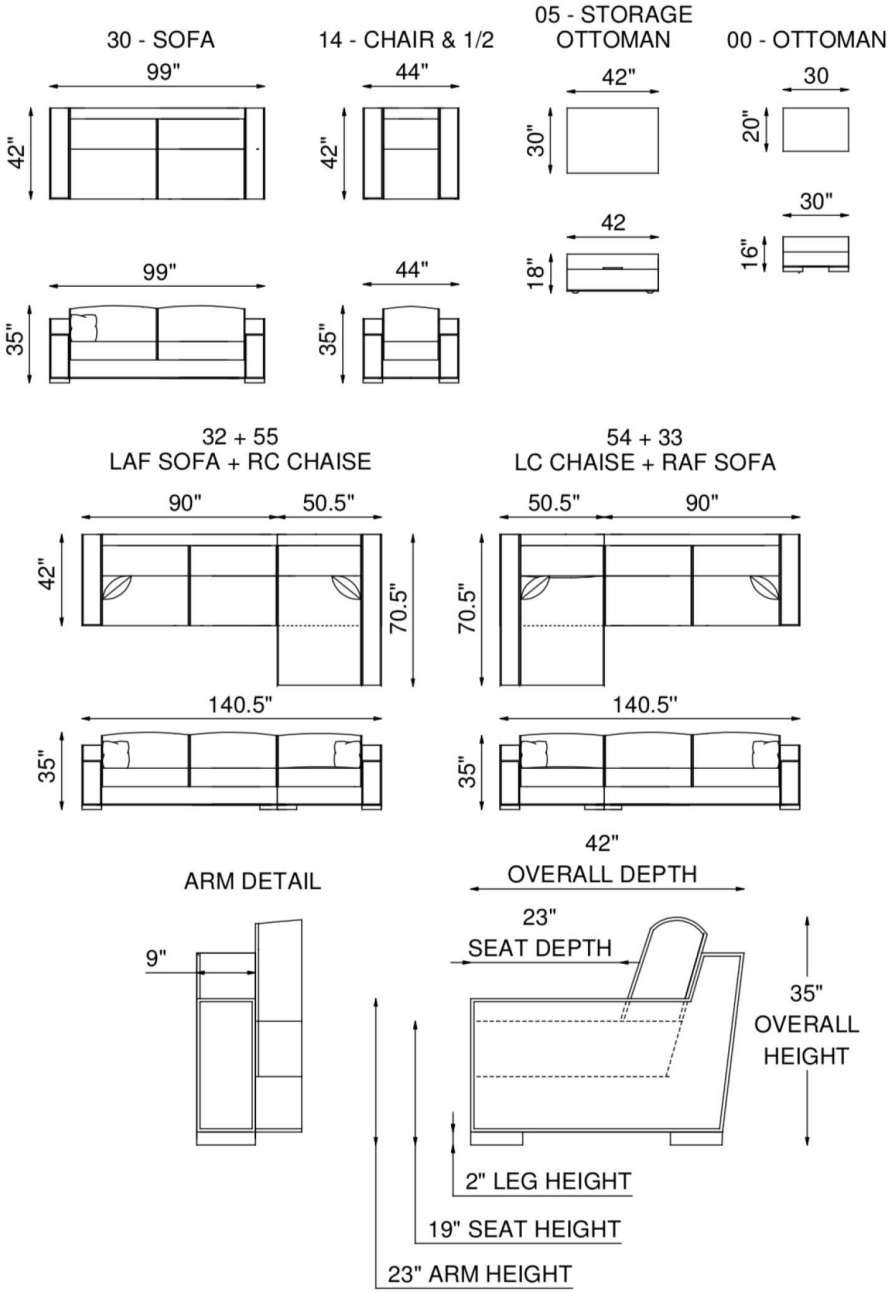

At Eleanor Rigby Home you can choose from our curated range of fabrics and leathers or provide your own. We offer a range of customization options, from hand-stitched leather to hand-finished treatments, metal and wood finishes. We welcome client specific designs and offer in-house design support and hands-on oversight throughout every phase of production. Visit Eleanorrigbyhome.com to see all options and to our customer service link for questions.